BACHMANN BRANCH-LINE

00 GAUGE RAILWAYS

S.R. LORD NELSON 4-6-0 TENDER LOCO
LOCO CODE 400-100S S.R. 'LORD NELSON' No. 850

401-100 S.R. 'SIR MARTIN FROBISHER' No. 864
402-100 B.R. 'SIR FRANCIS DRAKE' 30851
403-100 B.R. 'LORD ANSON' No. 30861

*ADD PREFIX 'T' FOR TENDER BODIES
* ADD PREFIX 'C' FOR TENDER CHASSIS
(TO ABOVE Nos.)

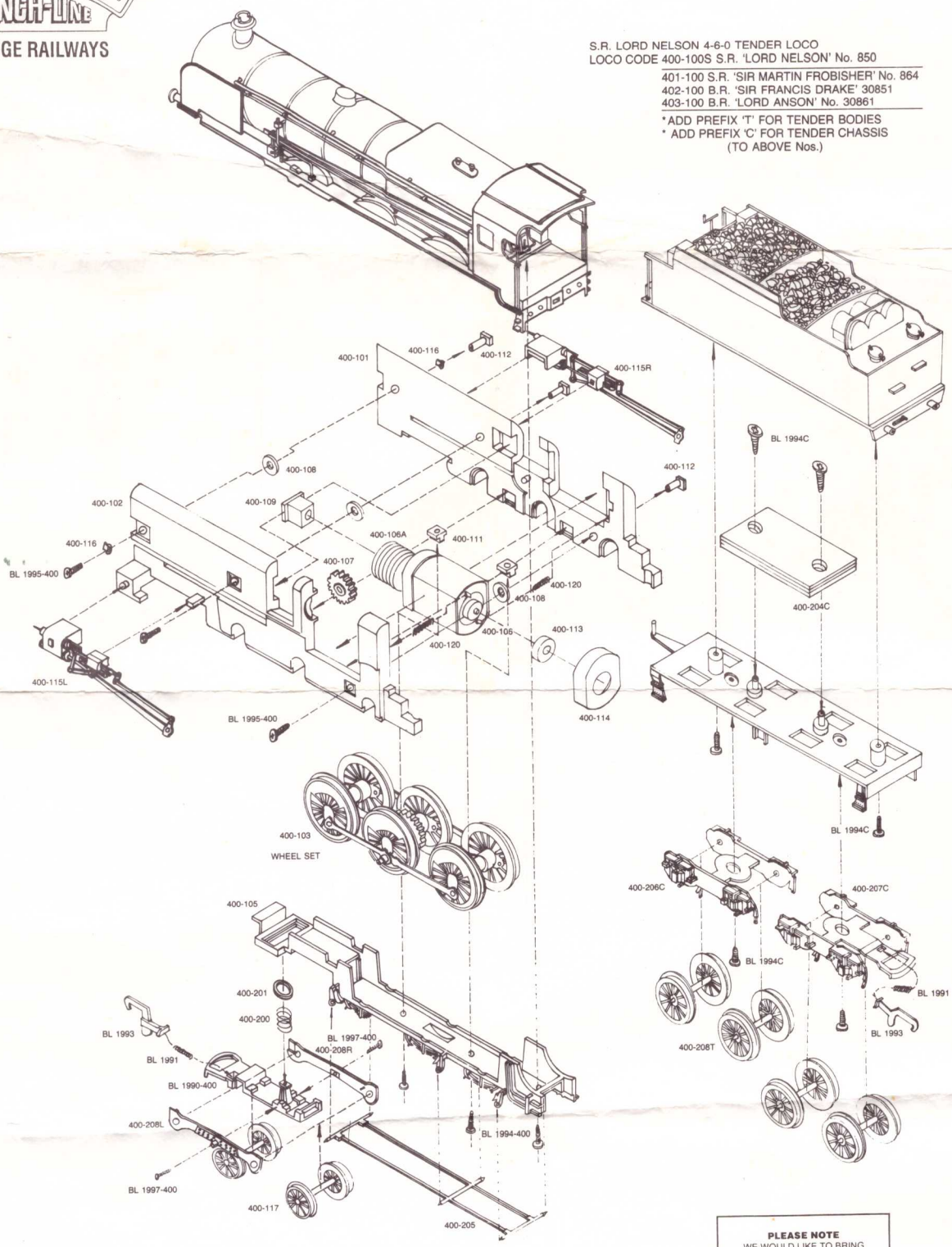

PLEASE NOTE
WE WOULD LIKE TO BRING YOUR ATTENTION TO **RUNNING-IN** WHICH IS NECESSARY WITH THIS TYPE OF DRIVE.
RUN FOR APPROXIMATELY ONE HOUR TO ALLOW WORKING PARTS TO BED-IN.
LIGHTLY OIL THE MOTOR BEARINGS AND GEARS WHEN REQUIRED.

Printed in Hong Kong